Wind Run Meter

Instruction for use 4.3018.10.000

Description

The Wind Run Meter is a purely mechanical device designed to determine the wind run. The measured value appears on a counter. The window of this counter is tilted in such a way that readings can be taken from below. The meter operates on the principle of consecutive indication. It can not be set to zero.
The ball-bearing shaft of the three-cup anemometer is connected over a gear to a counter. The cup anemometer is set in motion by the wind and starts to rotate. The rotations of the anemometer are indicated on the counter, whereby the speed of rotation is reduced by means of the gear in accordance with the anemometer costant (rotations per meter).
All materials used are rust-resistant. The case and the cup anemometer are made of Aluminium (anodized or varnished) and the mechanical parts inside the ca se are made of Niro or brass.
The parts belonging to the case are screwed together by means of an O-ring. The movable parts have labyrinth seals. This helps to protect the instrument from the effects of weather and rust.
It is advisable to mount this instrument onto a mast.

Technical Data

Indicating range	0 ... 999999.9 km-Windweg
Resolution	100 m- wind run
Height of digit	7 mm
Inclin. of counter	50°
Operating range	0.5 ... 60 m/s
Load	max. 60 m/s
Distance constant	5 m
Ambient temperature	-35 ... +80 °C (ice-free)
Mounting	onto a mast tube 1 1/2"-acc. to DIN 2441
Dimensions	Ø 318 x 260 mm
Fixing boring	Ø 50 x 50 mm
Weight	1.3 kg

Selecting a Site

In general wind measurement instruments should be able to detect the wind conditions of a large area. In order to obtain comparable values when determining the surface wind, measurements should be taken at a height of 10 meters over an even area with no obstacles. An area with no obstacles means that the distance between the wind direction transmitter and an obstacle should be at least 10 times the height of the obstacle (s. VDI 3786). If it is not possible to fulfil this condition then the wind direction transmitter should be set up a height where local obstacles do not influence the measured values to any significant extent (approx. 6-10 m above the obstacle). The wind direction transmitter should be set up in the centre of flat roofs and not on the edge in order to avoid any preferential directions.

Mounting of the cup star

Unscrew the cap nut (SW 8) from the Wind Run Meter case and remove the disk. Set the cup star into position in a way that the dowel pin in the cup star catches the nut of the protective cap. Replace the disk and re-screw the cap nut.

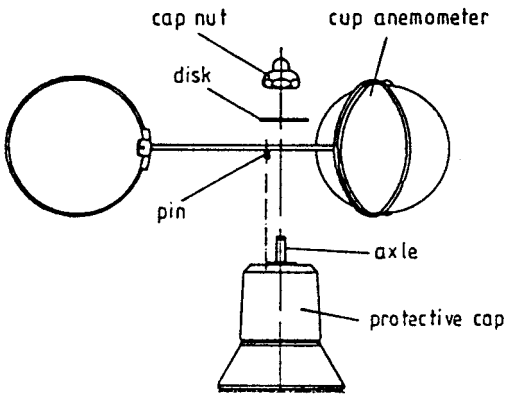

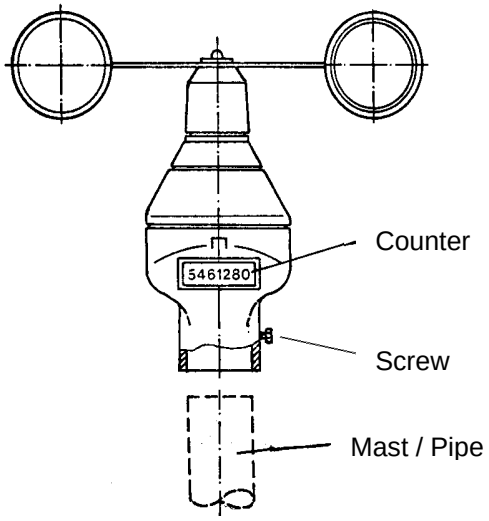

Mounting of the Wind Run Meter

Mount the Instrument to a short piece of pipe of R 1 1/2" (Ø49 mm) and a length of 50 mm. Set the Wind Run Meter onto the short piece and fasten it to the shaft with the two hexagonal screws.

Attention: Storing, mounting and operation under weather conditions is permissible only in vertical position, as otherwise water can get into the instrument.

Maintenance

If the instrument has been properly mounted, no maintenance is required. However, heavy pollution could cause a clogging of the slits between the rotating and stationary parts of the instrument. Thus it is recommendable to remove dirt deposits from the Wind Run Meter from time to time (depending on the local degree of pollution). Naturally, the ball-bearings and the gear unit are subject to a certain degree of wear and tear. After years of use, this could lead to a higher starting torque or to the fact that the cup anemometer no longer rotates. However, the cup anemometer must rotate already with light wind. Should such a defect occur, we would recommend that you return the instrument for repairs.

ADOLF THIES GmbH & Co. KG
Hauptstraße 76 37083 Göttingen Germany
P.O. Box 3536 + 3541 37025 Göttingen
Phone ++551 79001-0 Fax ++551 79001-65
www.thiesclima.com info@thiesclima.com